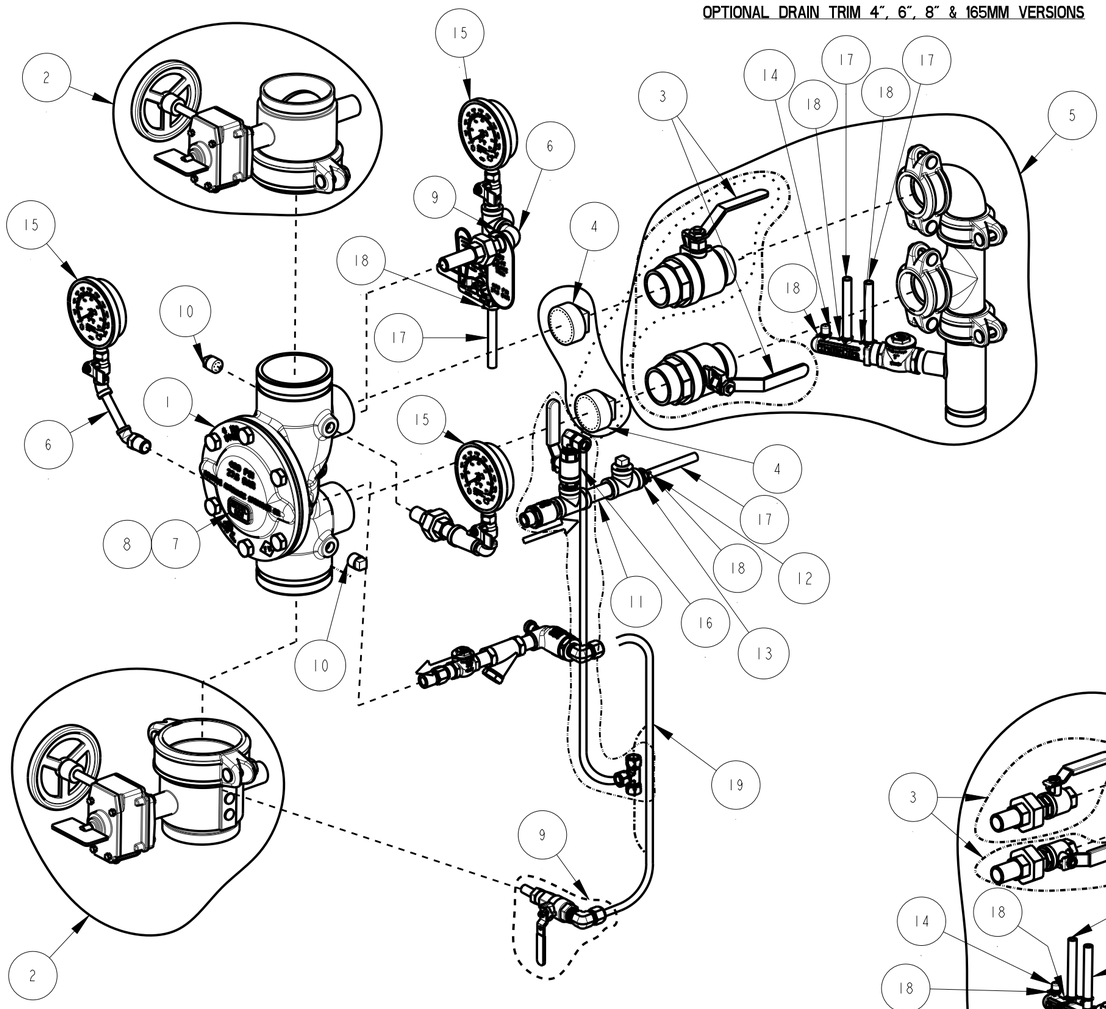

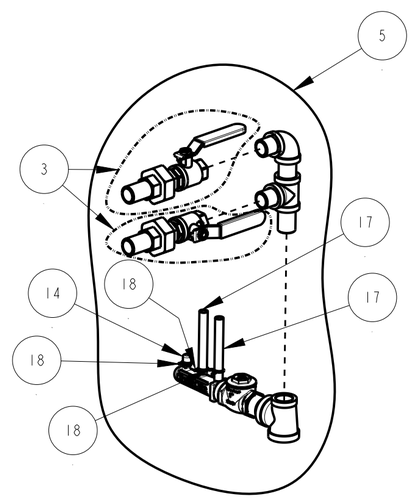

PRODUCT NUMBER SCHEME

0 - RED, GROOVE/GROOVE
1 - RED, FLANGE/FLANGE CLASS 150
2 - RED, FLANGE/FLANGE CLASS 300
3 - RED, FLANGE/FLANGE PN16
4 - RED, FLANGE/FLANGE BS-E
5 - RED, THREAD/THREAD NPT
6 - RED, THREAD/THREAD ISO 7/1
7 - BLACK, GROOVE/GROOVE
8 - BLACK, FLANGE/FLANGE CLASS 150
9 - BLACK, FLANGE/FLANGE CLASS 300
A - BLACK, FLANGE/FLANGE PN16
B - BLACK, FLANGE/FLANGE BS-E
C - BLACK, THREAD/THREAD NPT
D - BLACK, THREAD/THREAD ISO 7/1

0 - W/O CONTROL VALVE, VERTICAL
1 - W/ CONTROL VALVE, VERTICAL
2 - -----
3 - W/ 2 CONTROL VALVES, VERTICAL
4 - -----
5 - W/O CONTROL VALVE, HORIZONTAL
6 - W/ CONTROL VALVE, HORIZONTAL
7 - -----
8 - W/ 2 CONTROL VALVES, HORIZONTAL
9 - -----

6507040470

0 - 300 PSI GAUGE
1 - 600 PSI GAUGE

0 - 1-1/2" VALVE
2 - 2" VALVE
1 - 2-1/2" VALVE
7 - 76MM VALVE
3 - 3" VALVE
4 - 4" VALVE
6 - 6" VALVE
5 - 165MM VALVE
8 - 8" VALVE

0 - W/ DRAIN PLUGS, W/O ALARM TEST
1 - W/ 1 DRAIN VALVE, W/O ALARM TEST
2 - W/ 2 DRAIN VALVES, W/O ALARM TEST
3 - W/ FULL DRAIN, W/O ALARM TEST
4 - W/ DRAIN PLUGS, W/ ALARM TEST
5 - W/ 1 DRAIN VALVE, W/ ALARM TEST
6 - W/ 2 DRAIN VALVES, W/ ALARM TEST
7 - W/ FULL DRAIN, W/ ALARM TEST

REVISIONS

LTR	DESCRIPTION	DATE	DRAWN BY
	SEE PAGE 1		

MODEL DDV WET PILOT DELUGE TRIM ASSEMBLY P/N 6507040470 REV. L

PART NUMBER TABLE

SIZE	VALVE ASSEMBLY BLACK (ITEM 1)	VALVE ASSEMBLY RED (ITEM 1)	CONTROL VALVE S/A (ITEM 2)	BALL VALVE (DRAIN) (ITEM 3)	PLUG (DRAIN) (ITEM 4)	TRIM, DRAIN (ITEM 5)
1-1/2" GR/GR	6103015507	6103015500	7700030A	77000300	98614401	77037003
1-1/2" FLG/FLG CLASS 150	6103015508	6103015501	N/A			
1-1/2" FLG/FLG CLASS 300	6103015509	6103015502				
1-1/2" FLG/FLG PN16	610301550A	6103015503				
1-1/2" FLG/FLG BS-E	610301550B	6103015504				
1-1/2" THD/THD NPT	610301550C	6103015505				
1-1/2" THD/THD ISO 7/1	610301550D	6103015506				
2" GR/GR	6103020507	6103020500	77000301			
2" FLG/FLG CLASS 150	6103020508	6103020501	N/A			
2" FLG/FLG CLASS 300	6103020509	6103020502				
2" FLG/FLG PN16	610302050A	6103020503				
2" FLG/FLG BS-E	610302050B	6103020504				
2" THD/THD NPT	610302050C	6103020505				
2" THD/THD ISO 7/1	610302050D	6103020506				
2-1/2" GR/GR	6103025507	6103025500	77000302	77000299	95200126	77037004
2-1/2" FLG/FLG CLASS 150	6103025508	6103025501	N/A			
2-1/2" FLG/FLG CLASS 300	6103025509	6103025502				
2-1/2" FLG/FLG PN16	610302550A	6103025503				
2-1/2" FLG/FLG BS-E	610302550B	6103025504				
2-1/2" THD/THD NPT	610302550C	6103025505				
2-1/2" THD/THD ISO 7/1	610302550D	6103025506				
76MM GR/GR	6103076507	6103076500	N/A			
3" GR/GR	6103030507	6103030500	77000303			
3" FLG/FLG CLASS 150	6103030508	6103030501	N/A			
3" FLG/FLG CLASS 300	6103076509	6103076502				
3" FLG/FLG PN16	610303050A	6103030503				
3" FLG/FLG BS-E	610303050B	6103030504				
3" THD/THD NPT	610303050C	6103030505				
3" THD/THD ISO 7/1	610303050D	6103030506				
4" GR/GR	6103040507	6103040500	77000304	98840110	95206106	77037002
4" FLG/FLG CLASS 150	6103040508	6103040501	N/A			
4" FLG/FLG CLASS 300	6103040509	6103040502				
4" FLG/FLG PN16	610304050A	6103040503				
4" FLG/FLG BS-E	610304050B	6103040504				
6" GR/GR	6103060507	6103060500	77000306			
6" FLG/FLG CLASS 150	6103060508	6103060501	N/A			
6" FLG/FLG CLASS 300	6103060509	6103060502				
6" FLG/FLG PN16	610306050A	6103060503				
6" FLG/FLG BS-E	610306050B	6103060504				
165MM GR/GR	6103065507	6103065500	N/A			
8" GRV/GRV	6103080507	6103080500	77000308			77037012
8" FLG/FLG CLASS 150	6103080508	6103080501	N/A			
8" FLG/FLG CLASS 300	6103080509	6103080502				
8" FLG/FLG PN16	610308050A	6103080503				
8" FLG/FLG BS-E	610308050B	6103080504				

BILL OF MATERIALS

ITEM NO.	PART NO.	DESCRIPTION	REMARKS	QTY.
20	89097903	THREAD SEALANT		A/R
19	98768010	COPPER TUBE, 1/2"	24 IN	A/R
18	95306255	CLAMP, HOSE, 1/2" CONSTANT TENSION, ZINC		5
17	96686756	TUBING, PVC, 3/8" I.D. X 6FT.		A/R
16	77000280	ALARM TEST KIT		A/R
15	98248005	GAUGE, WATER PRESSURE (0-600 PSI)		3
	98248001	GAUGE, WATER PRESSURE (0-300 PSI)		
14	99050906	END CAP, PVC, 1/2"		1
13	98761651	TEE,1/2X1/2X1/2,GALVANIZED		1
12	98580016	ORIFICE, DRAIN, BARBED		1
11	98543210	NIPPLE,1/2X2-1/2,GALVANIZED STEEL		1
10	98604406	PIPE, PLUG, IRON, SQUARE HEAD, 1/2		3
9	94616952	NAMEPLATE		1
8	94617015	PLATE		1
7	94616999	ADHESIVE, BACKING PAD		1
6	77037022	BASIC TRIM, DELUGE		1
5	SEE PART NUMBER TABLE	TRIM, SUB-ASSY, DRAIN		1
4		PLUG (DRAIN)	SEE NOTES FOR QTY.	A/R
3		BALL VALVE (DRAIN)	SEE NOTES FOR QTY.	A/R
2		SUBASSEMBLY, CONTROL VALVE	SEE NOTES FOR QTY.	A/R
1		ASSEMBLY, VALVE, DDV		1

THIS DRAWING CONTAINS INFORMATION PROPRIETARY TO THE RELIABLE AUTOMATIC SPRINKLER CO. IT MAY NOT BE REPRODUCED NOR MAY ANY INFORMATION HEREON BE DISCLOSED TO OTHERS WITHOUT THE SPECIFIC WRITTEN PERMISSION OF RELIABLE.

VOLUME CU. IN. 0.000

DO NOT SCALE DRAWING. REMOVE BURRS, BREAK SHARP EDGES

TOLERANCE UNLESS OTHERWISE SPECIFIED

ANGLE ± 1/2°
MACH. FINISH 63

FRACT. ± 1/32 [0.79]
DEC. XX ± .010 [0.25]
DEC. XXX ± .005 [0.13]

THE RELIABLE AUTOMATIC SPRINKLER CO., INC.
LIBERTY, S.C.

PART NO: 6507040470 | DWG.SIZE: C
PART: ASSEMBLY, TRIM, DELUGE, WET PILOT
PRODUCT: MODEL DDV, DIAPHRAGM VALVE TRIM
FILE NO: 6507040470 | ENG: DD | DRW BY: JB
SCALE: 1:2 | DATE: 01/17/17 | SHEET 2 of 2

REVISIONS			
LTR	DESCRIPTION	DATE	DRAWN BY
~	RELEASE FOR PROD. ERN #12901	08/25/17	JB
A	ECN #15043	12/13/17	JB
B	ECN #15643	06/07/18	JB
C	ECN #24679	10/25/21	MK
D	ECN #26461	07/06/22	FP

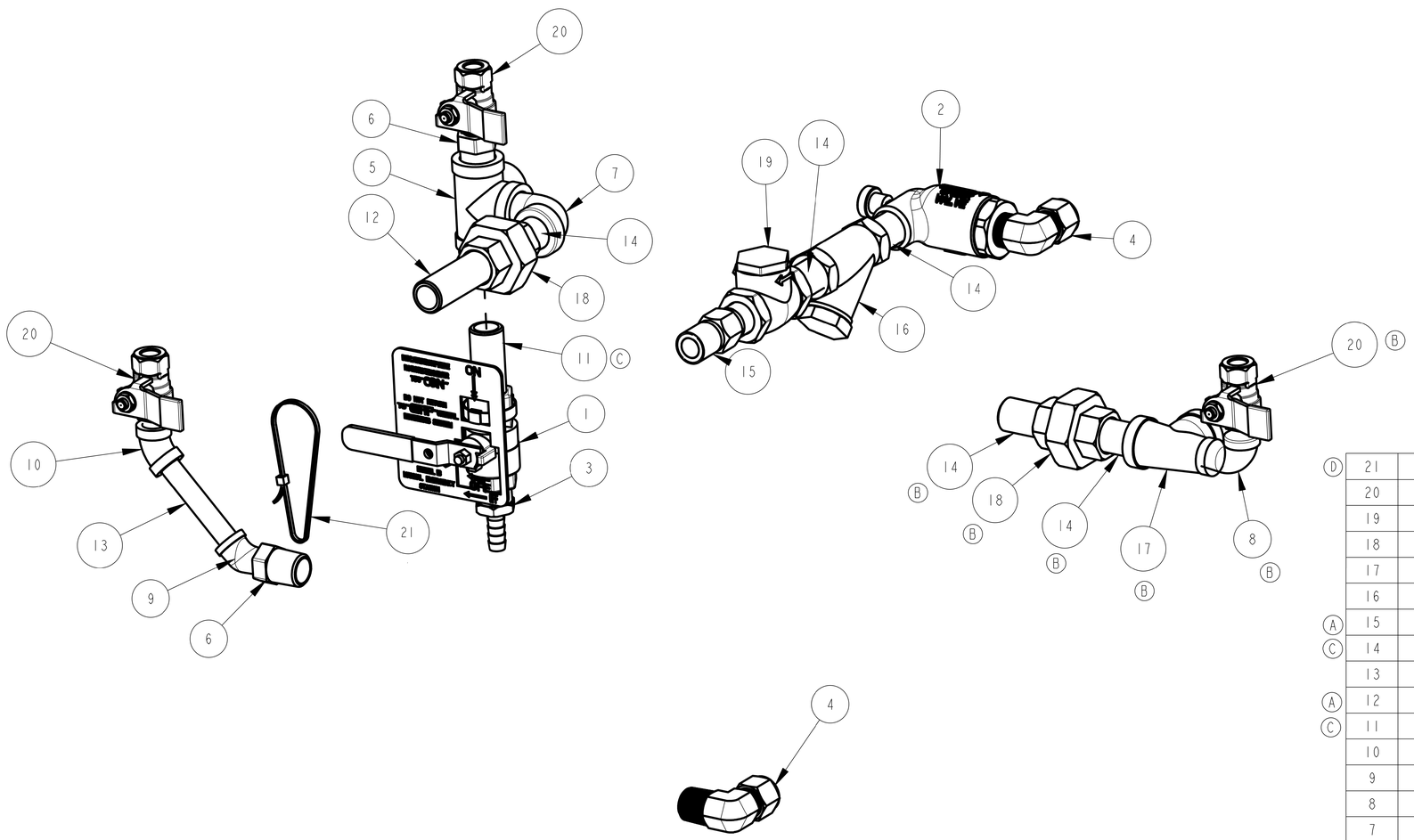

ITEM NO.	PART NO.	DESCRIPTION	REMARKS	QTY.
(D) 21	89141112	TIE, RETAINING		9
20	98840237	VALVE, BALL, 1/4" NPTF x 1/4" NPTM		3
19	98840181	HORIZ. SWING CHECK VALVE, 1/2" NPT		1
18	98815200	UNION, 1/2, IRON, G.J., GALV.		2
17	98761649	TEE,1/2X1/4X1/2,GALVANIZED		1
16	98727615	STRAINER, TRIM		1
(A) 15	98580015	ORIFICE, RESTRICTING, 1/2 NPT, .125 ORIF.		1
(C) 14	98543223	NIPPLE,1/2X1-1/2,GALVANIZED STEEL		5
13	98543220	NIPPLE,1/4X3,GALVANIZED STEEL		1
(A) 12	98543210	NIPPLE,1/2X2-1/2,GALVANIZED STEEL		1
(C) 11	98543209	NIPPLE,1/2X2,GALVANIZED STEEL		1
10	98174420	ELBOW, 45°, 1/4", GALV.		1
9	98174419	ELBOW, 1/4, 45°, STREET		1
8	98174408	ELBOW, STREET, 1/4", GALV.		1
7	98174400	ELBOW, STREET, 1/2", GALV.		1
6	98048000	BUSHING, REDUCER, 1/2X1/4, GALVANIZED		2
5	96626902	TEE, SIDE OUTLET, 1/2", 90°, GALV.		1
4	92606707	ADAPTER,ELBOW,90°,1/2 OD TUBE,1/2 NPT,BRASS		2
3	92056810	CONNECTOR, 3/8" ID TUBE x 1/2" NPT		1
2	78653200	VALVE, CHECK, VELOCITY 1/2 NPT, MODEL A, BRASS		1
1	78653000	ASSEMBLY, MANUAL EMERGENCY STATION		1

BILL OF MATERIALS

MTL. N/A
FINISH:
REV. VER.

DO NOT SCALE DRAWING
REMOVE BURRS, BREAK SHARP EDGES
TOLERANCE UNLESS OTHERWISE SPECIFIED:
ANGLE ± 1/2 63√ FRACT. ± 1/32 [0.79]
MACH. FINISH DEC. XX ± .010 [0.25]
CONC. T.I.R. DEC. XXX ± .005 [0.13]
SQUARENESS - PARALLELISM

THE RELIABLE AUTOMATIC SPRINKLER CO., INC.
LIBERTY, S.C.

PART NO: 77037022 | DWG.SIZE: C
PART: BASIC TRIM, DELUGE
PRODUCT: MODEL DDV DIAPHRAGM TRIM

FILE NO:	ENG: DD	DRW BY: JB	C'K'D:
77037022	SCALE: 2:5	DATE: 02/07/17	SHEET 1 of 1

THIS DRAWING CONTAINS INFORMATION PROPRIETARY TO THE RELIABLE AUTOMATIC SPRINKLER CORP. IT MAY NOT BE REPRODUCED NOR MAY ANY INFORMATION HEREON BE DISCLOSED TO OTHERS WITHOUT THE SPECIFIC WRITTEN PERMISSION OF RELIABLE.

REVISIONS			
LTR	DESCRIPTION	DATE	DRAWN BY
~	RELEASED FOR PROD. ERN #12035	03/11/16	MK
A	ECN #14444	09/22/17	AW
B	ECN #21576	11/27/19	AW
C	ECN #22823	05/19/20	MK
D	ECN #23756	11/05/20	AW
E	ECN #24331	09/24/21	AW
F	ECN #26059	01/14/22	FP
G	ECN #26461	07/06/22	FP
H	ECN #27005	07/20/22	AW
J	ECN #28019	03/21/23	MK

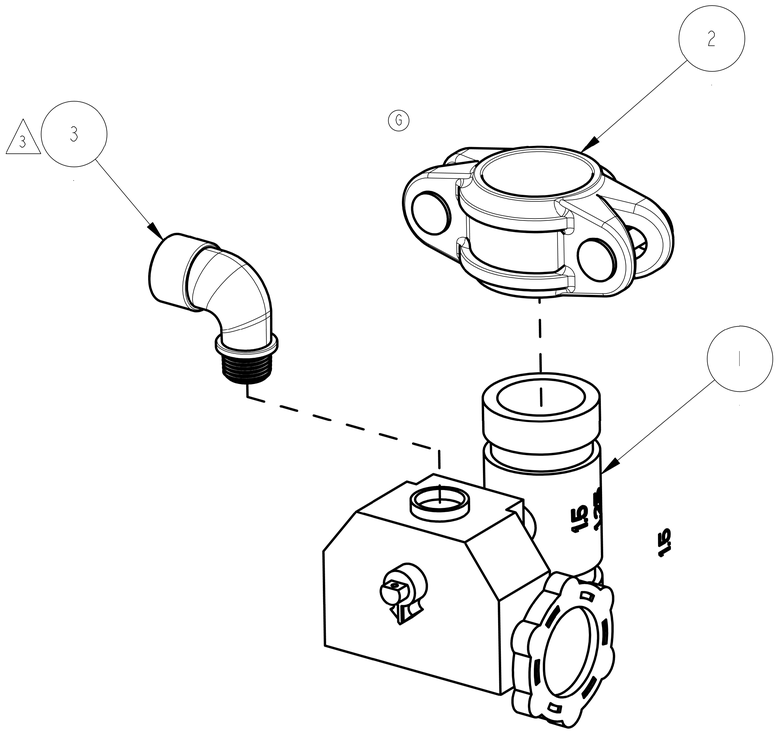

ASSEMBLY VIEW FOR
1-1/2" AND 2"

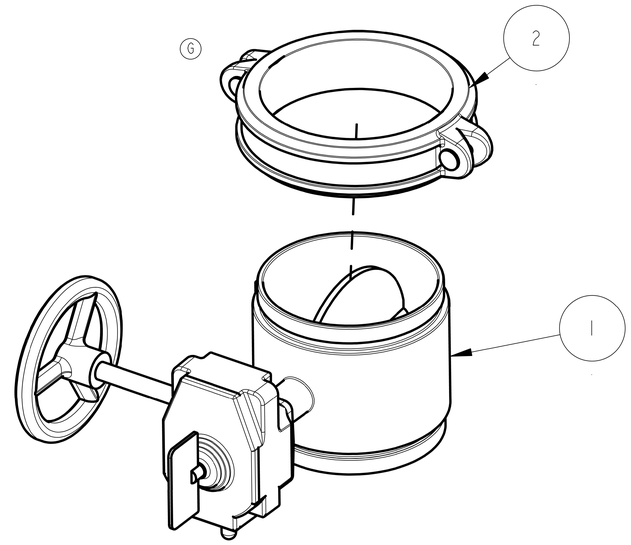

ASSEMBLY VIEW FOR
2-1/2" - 8"

E F G

P/N TABLE AND BOM

ITEM NO.	DESCRIPTION	QTY	1-1/2" (40MM) P/N 7700030A	2" (100MM) P/N 77000301	2-1/2" (100MM) P/N 77000302	3" (100MM) P/N 77000303	4" (100MM) P/N 77000304	6" (150MM) P/N 77000306	8" (200MM) P/N 77000308	76MM P/N 77000305	165MM P/N 77000307
1	BUTTERFLY VALVE, 1-1/2"	1	7M99004568								
	BUTTERFLY VALVE, 2"	1		7M99004960							
	BUTTERFLY VALVE, 2-1/2"	1			7M99004905						
	BUTTERFLY VALVE, 3"	1				7M99004906					
	BUTTERFLY VALVE, 4"	1					7M99004907				
	BUTTERFLY VALVE, 6"	1						7M99004908			
	BUTTERFLY VALVE, 8"	1							7M99004909		
	BUTTERFLY VALVE, 76MM	1								7U99002805	
	BUTTERFLY VALVE, 165MM	1									7U99002806
2	COUPLING, RIGID, 1-1/2"	1	7G05060600								
	COUPLING, RIGID, 2"	1		7G05080800							
	COUPLING, RIGID, 2-1/2"	1			7G05101000						
	COUPLING, RIGID, 3"	1				7G05121200					
	COUPLING, RIGID, 4"	1					7G05161600				
	COUPLING, RIGID, 6"	1						7G05242400			
	COUPLING, RIGID, 8"	1							7G05323200		
	COUPLING, RIGID, 76MM	1								7T15101009	
	COUPLING, RIGID, 165MM	1									7T15242409
3	ELBOW, RIGID, STREET, CONDUIT	1	98174451							98174451	

J H G C A 2 / J H G / J H G 1 / J H G / J H G / E / E / E / E / E / G B / A

NOTES:

J 1. USE NIBCO BUTTERFLY VALVES AS ALTERNATIVE:

2" - P/N 7M99004569
2-1/2" - P/N 6215051000
3" - P/N 6215051200
4" - P/N 6215051600
6" - P/N 6215052400
8" - P/N 6215053200

C A D E 2. IF 2" ANVILSTAR BUTTERFLY VALVE P/N 6990003549 IS USED AS ALTERNATIVE. THE HANDLE SHOULD BE POSITIONED ON THE LEFT SIDE.

B 3. REMOVE PLASTIC NIPPLE AND REPLACE WITH CONDUIT ELBOW, ITEM #3

THIS DRAWING CONTAINS INFORMATION PROPRIETARY TO THE RELIABLE AUTOMATIC SPRINKLER CORP. IT MAY NOT BE REPRODUCED NOR MAY ANY INFORMATION HEREON BE DISCLOSED TO OTHERS WITHOUT THE SPECIFIC WRITTEN PERMISSION OF RELIABLE.

MTL.
N/A

FINISH:

DO NOT SCALE DRAWING
REMOVE BURRS, BREAK SHARP EDGES
TOLERANCE UNLESS OTHERWISE SPECIFIED:
ANGLE ± 1/2 63√ FRACT. ± 1/32 [0.79]
MACH. FINISH DEC. XX ± .010 [0.25]
CONC. T.I.R. DEC. XXX ± .005 [0.13]
SQUARENESS - PARALLELISM 0041P

THE RELIABLE AUTOMATIC SPRINKLER CO., INC.
LIBERTY, S.C.

PART NO: 77000306 | DWG.SIZE: C G

PART: SUBASSEMBLY, CONTROL VALVE

PRODUCT: VARIOUS TRIMS

FILE NO:	ENG: DD	DRW BY: MK	C'K'D:
77000306	SCALE: 1:4	DATE: 02/08/16	SHEET 1 of 1

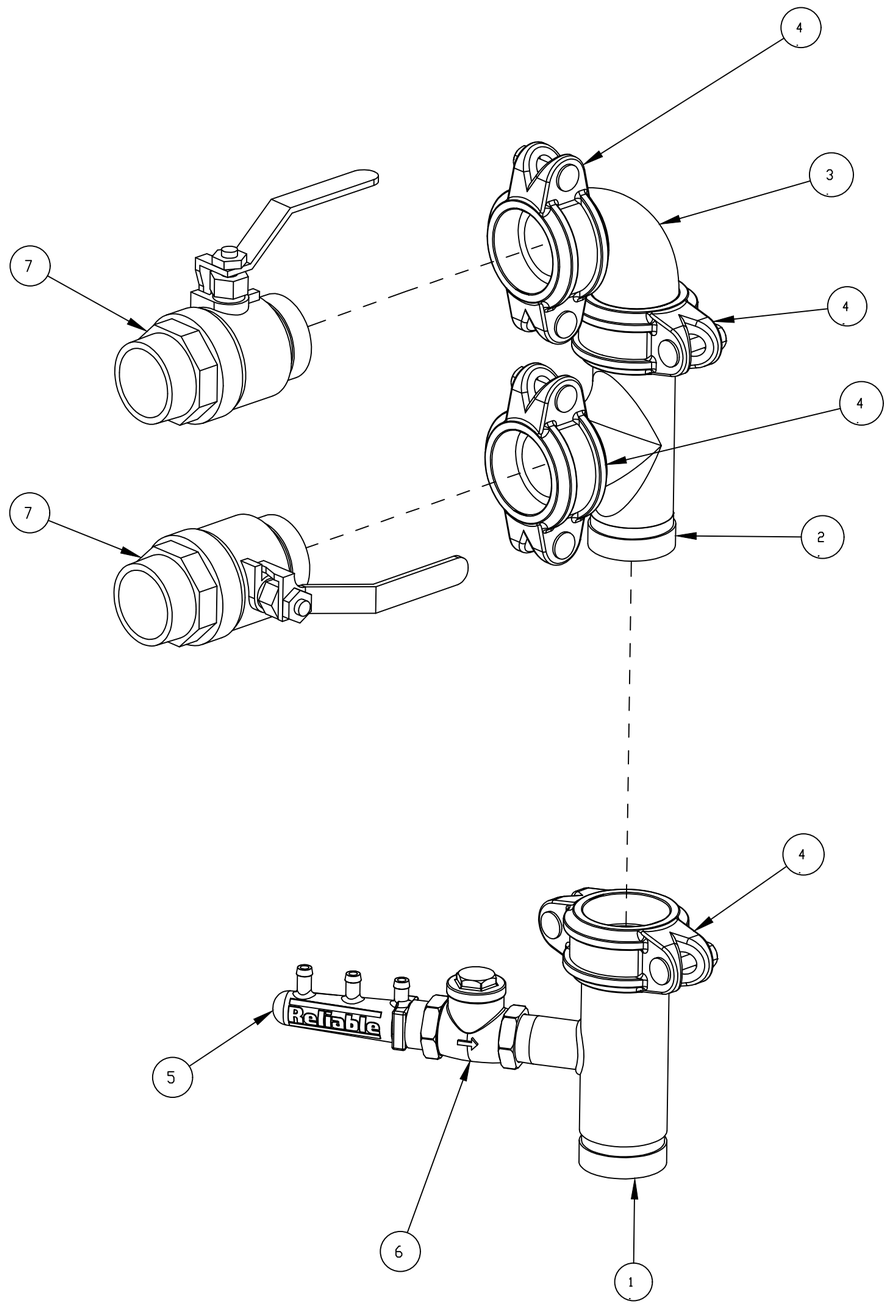

ITEM NO.	PART NO.	DESCRIPTION	PAINTED SUB-ASSY P/N 77037002	GALVANIZED SUB-ASSY P/N 77037005
1	96610014	TEE,WELDED,2"GRVx2"GRVx1"THRD,PTD	1	-
	96610021	TEE,WELDED,2"GRVx2"GRVx1"THRD,GALV	-	1
2	96613020	TEE,2"x2"x2",GRV,PTD	1	-
	96613021	TEE,2"x2"x2",GRV,GALV	-	1
3	98174500	ELBOW,2",GRV,PTD	1	-
	98174501	ELBOW,2",GRV,GALV	-	1
4	7G05080800	COUPLING,RIGID,2",PTD	4	-
	7G05080801	COUPLING,RIGID,2",GALV	-	4

ITEM NO.	PART NO.	DESCRIPTION	REMARKS	QTY.
7	9884011D	VALVE, BALL 2 GROOVED X THREADED, TRIM		2
6	98840145	SWING CHECK VALVE, 1" NPT		1
5	91004298	MANIFOLD, DRAIN, BARBED, 4-7/8		1
4	SEE TABLE	COUPLING, RIGID, 2"		4
3		TEE, 2 x 2 x 2, GRV/GRV		1
2		TEE, 2 x 2 x 2, GRV/GRV		1
1		TEE, WELDED, 2" GRV X 2" GRV X 1" THRD		1

BILL OF MATERIALS

MTL.
N/A
FINISH:

DO NOT SCALE DRAWING
REMOVE BURRS, BREAK SHARP EDGES
TOLERANCE UNLESS OTHERWISE SPECIFIED:
ANGLE ± 1/2 [0.79] FRACT. ± 1/32
MACH. FINISH [0.25] 63 DEC. XX ± .010
CONC. T.I.R. [0.13] DEC. XXX ± .005
SQUARENESS - PARALLELISM

THE RELIABLE AUTOMATIC SPRINKLER CO., INC.
LIBERTY, S.C.

PART NO: SEE TABLE | DWG.SIZE: C
PART: TRIM, DRAIN SUB-ASSY
PRODUCT: MODEL DDV 4" - 10"

FILE NO: 77037002	ENG: DD	DRW BY: MK	C'K'D:
	SCALE: 1:3	DATE: 05/20/16	SHEET 1of1

THIS DRAWING CONTAINS INFORMATION PROPRIETARY TO THE RELIABLE AUTOMATIC SPRINKLER CORP. IT MAY NOT BE REPRODUCED NOR MAY ANY INFORMATION HEREON BE DISCLOSED TO OTHERS WITHOUT THE SPECIFIC WRITTEN PERMISSION OF RELIABLE.

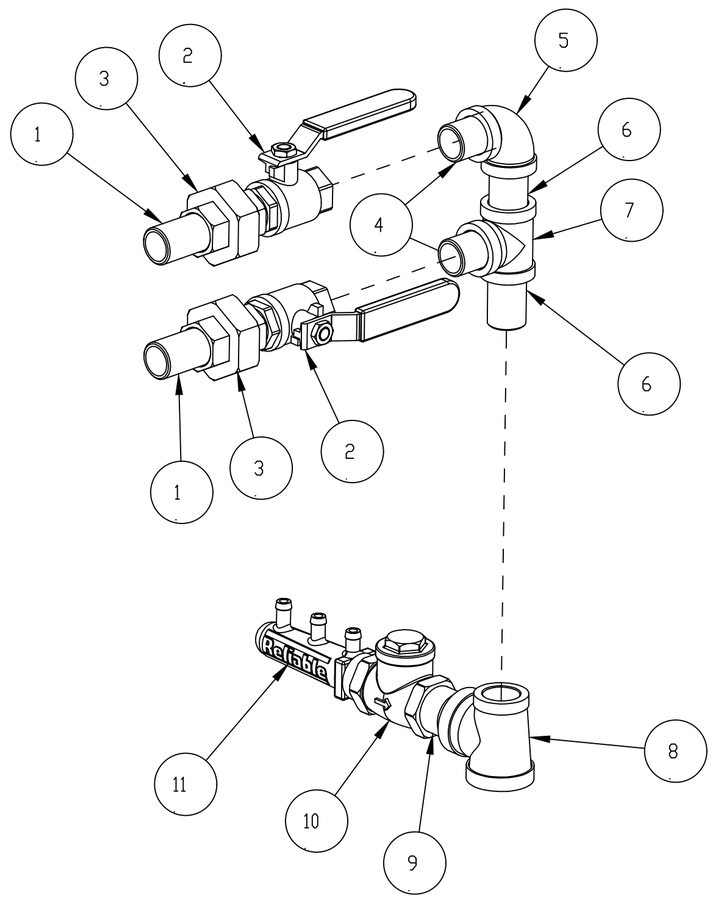

DRAIN SUB-ASSY P/N 0266P 1-1/2" - 2" SHOWN

ITEM NO.	PART NO.	DESCRIPTION	QTY.	
11	91004298	MANIFOLD, DRAIN, BARBED	1	1
10	98840145	VALVE, CHECK, 1"	1	1
9	98543213	NIPPLE, STEEL, GALV., 1" X 1-1/2"	1	1
8	96606630	TEE, GLVN., 1-1/4" X 1-1/4" X 1"	—	1
	96606602	TEE, GLVN., 3/4" X 1" X 1"	1	—
7	96606634	TEE, GLVN., 1-1/4" X 1-1/4" X 1-1/4"	—	1
	96606601	TEE, GLVN., 3/4"	1	—
6	98543296	NIPPLE, STEEL, GALV., 1-1/4" X 2-1/2"	—	2
	98543232	NIPPLE, STEEL, GALV., 3/4" X 2"	2	—
5	98174414	ELL, 1-1/4", MALL IRON, GALV.	—	1
	98174402	ELL, 3/4", MALL IRON, GALV.	1	—
4	98543285	NIPPLE, STEEL, GALV., 1-1/4" X CLOSE"	—	2
	98543215	NIPPLE, STEEL, GALV., 3/4" X 1-1/2"	2	—
3	98815208	UNION, 1-1/4", IRON, G.J., GALV.	—	2
	98815202	UNION, 3/4", IRON, G.J., GALV.	2	—
2	9884011C	VALVE, BALL, 1-1/4" NPTM X 1-1/4" NPTF	—	2
	9884011B	VALVE, BALL, 3/4" NPTM X 3/4" NPTF	2	—
1	98543297	NIPPLE, STEEL, GAL., 1-1/4" X 2"	—	2
	98543232	NIPPLE, STEEL, GALV., 3/4" X 2"	2	—
	77037004	TRIM, DRAIN SUB-ASSY, 2-1/2" - 3"	—	
	77037003	TRIM, DRAIN SUB-ASSY, 1-1/2" - 2"		—

BILL OF MATERIALS

MTL.
N/A

REV.
VER.

FINISH:

DO NOT SCALE DRAWING
REMOVE BURRS, BREAK SHARP EDGES
TOLERANCE UNLESS OTHERWISE SPECIFIED:
ANGLE ± 1/2 [0.79] FRACT. ± 1/32
MACH. FINISH 63 [0.25] DEC. XX ± .010
CONC. T.I.R. [0.13] DEC. XXX ± .005
SQUARENESS - PARALLELISM

THE RELIABLE AUTOMATIC SPRINKLER CO., INC.
LIBERTY, S.C.

PART NO: VARIOUS | DWG.SIZE: C

PART: TRIM, DRAIN SUB-ASSY

PRODUCT: MODEL DDV 1-1/2" - 3"

FILE NO: 77037003	ENG: DD	DRW BY: JB	C'K'D:
	SCALE: 1:3	DATE: 02/10/17	SHEET 1of1

THIS DRAWING CONTAINS INFORMATION PROPRIETARY TO THE RELIABLE AUTOMATIC SPRINKLER CORP. IT MAY NOT BE REPRODUCED NOR MAY ANY INFORMATION HEREON BE DISCLOSED TO OTHERS WITHOUT THE SPECIFIC WRITTEN PERMISSION OF RELIABLE.

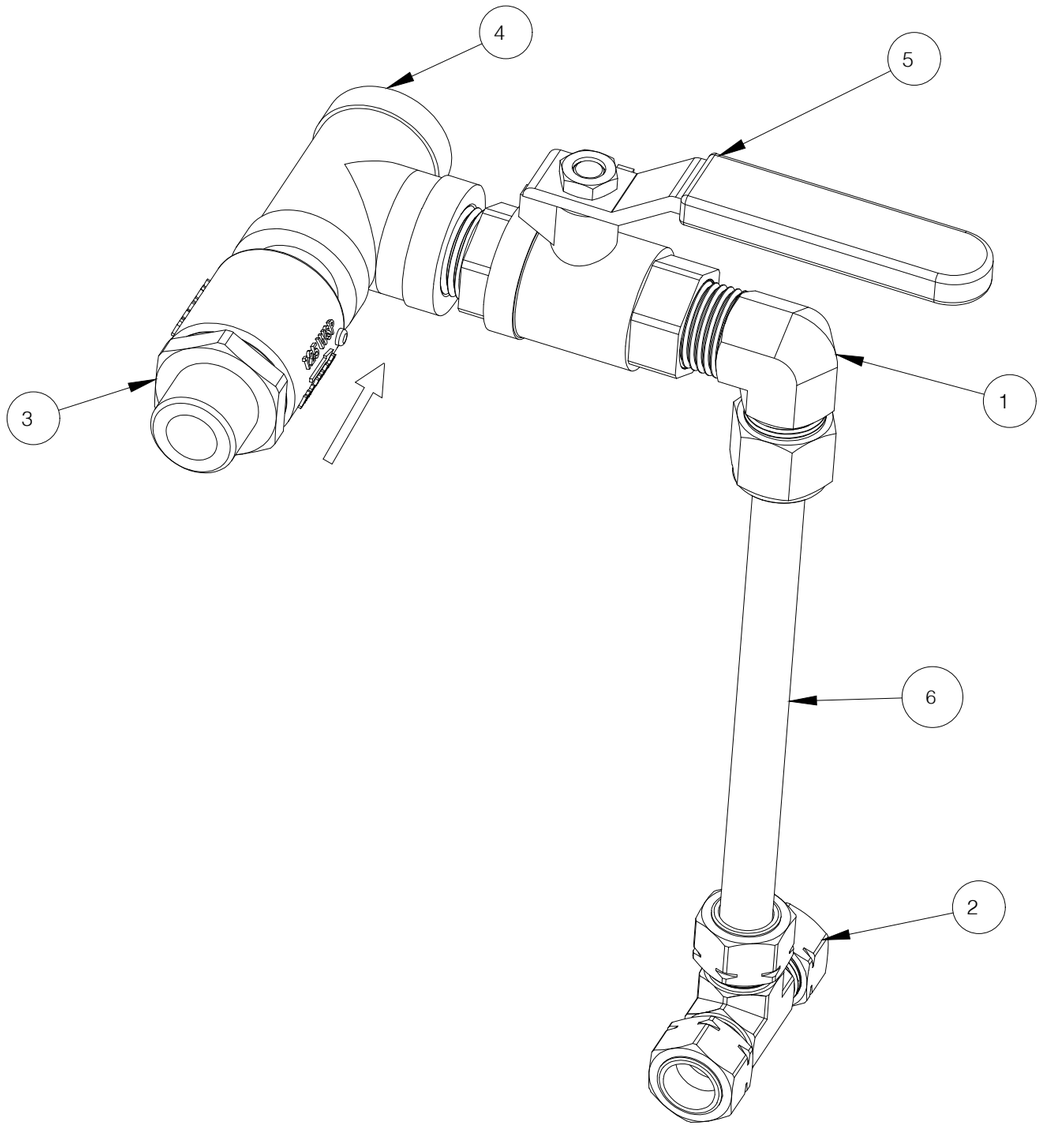

ALARM TEST CONNECTION
DDV DELUGE (NON-PRESSURE REGULATING)

ITEM NO.	PART NO.	DESCRIPTION	REMARKS	QTY.
6	98768010	COPPER TUBE, 1/2"	18 IN	A/R
5	9884011A	VALVE, BALL, 1/2 NPTF X 1/2 NPTM		1
4	98761651	TEE,1/2X1/2X1/2,GALVANIZED		1
3	96816906	VALVE,CHECK,MALE 1/2,MALE 1/2		1
2	96606705	ADAPTER, TEE, 1/2" O.D. TUBE		1
1	92606707	ADAPTER,ELBOW,90°,1/2 OD TUBE,1/2 NPT,BRASS		1

BILL OF MATERIALS